BT8377

BOLT-DOWN RETRACTABLE BASE VIDEOWALL STAND

Designed to mount multi-screen videowalls, the **BT8377** is a bolt-down retractable mounting solution suitable for videowall screens up to 75". Ideal for retail displays and other applications with minimal floor space in front of the stand. The retractable floor base enables seamless movement backwards of up to 400mm for easy servicing and maintenance of hardware. To configure your retractable videowall solution, contact B-Tech's dedicated technical support team at ***technical@btechavmounts.com***

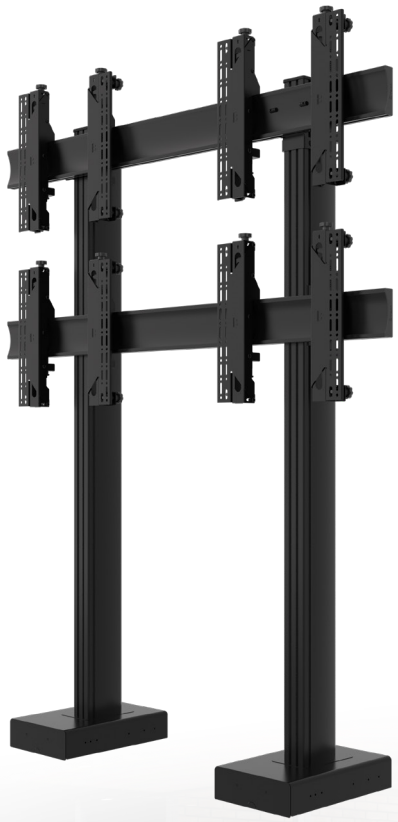

SPECIFICATIONS

Recommended screen size	**32" - 75"**
Max load	**150kg** per column
VESA® & non-VESA fixings	up to **900mm***
Base dimensions	W: **262mm** H: **88mm** D: **426-832mm**
Maximum retraction	**400mm**
Colour (base, rails & interface arms)	**Black**
Colour (columns)	**Black** or **Silver**

FEATURES

1. Tool-less micro-adjustments for seamless screen alignment
2. Sliding floor base retracts the System X column/display stand backwards
3. Collar compatible accessories can be fitted directly to the extrusion
4. B-Tech technical support available for configuration and quoting

- Suitable for landscape or portrait mounting
- Small footprint for an unobtrusive installation into confined areas
- Ideal for shop fronts, close-to-the-window installations
- Lockable mechanism
- Internal storage area in base, ideal for power supplies, extension cord etc.
- Integrated cable management
- Safety screws help prevent unauthorised removal of screens
- All mounting hardware included

Example 2x2 configuration shown

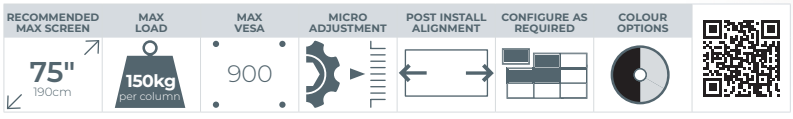

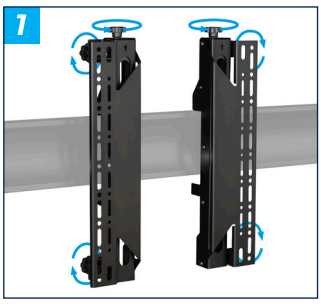

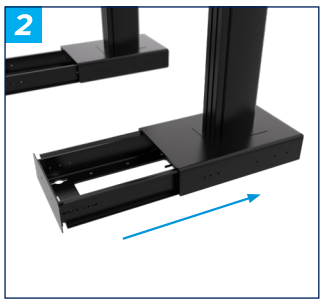

© 2025 B-Tech AV Mounts Corporation Ltd. All rights reserved.
The information in this specification sheet reflects the current technical specifications at the time of print.
We reserve the right to modify specifications without prior notice as part of our commitment to ongoing product improvement.
All other brands and products are trademarks of their respective owners. All B-Tech image and symbol usage is exclusive property of B-Tech AV Mounts Co. Ltd.
B-Tech accepts no liability for loss or damage caused by improper installation or mounting on unsuitable structures. Any reproduction or retransmission or republication of any part of this specification sheet is strictly prohibited, unless prior written permission has been granted by B-Tech AV Mounts Co. Ltd. E&OE.

SS-V1-BT8377-011025

*Refers to maximum vertical fixing dimension for a typical configuration. Correctly sized interface arms and adaptors will be supplied as necessary to suit the mounting pattern you require.