BT8227

glide • **cantilever**

BTech AV Mounts | glide

TWIN CANTILEVER FLAT SCREEN WALL MOUNT
WITH TILT & SWIVEL

Designed for large screens up to 75", the **BT8227** universal twin-cantilever wall mount combines strength and versatility with effortless usability. Its unique soft-touch tilt mechanism allows users to reposition displays up to 50kg with a simple touch, securely holding the tilt in place. Featuring swivel points at the wall and interface, the mount enables quick and smooth screen adjustments, whether folded flat against the wall or fully extended. Compatible with 16" stud walls, brick, and concrete surfaces, this mount is engineered for both commercial and home installations.

SPECIFICATIONS

Recommended screen size	up to **75"**
Max load	**50kg**
Universal fixings	up to **600** x **400mm**
Tilt	**+14˚ / -3˚**
Screen levelling	**+ / -3˚**
Swivel	**180˚** at wall & interface
Lateral adjustment	**+ / -20mm**
Distance from wall	Min: **63mm** Max: **582mm**
Colour	**Black**

FEATURES

1. Soft-touch tilt for easy, secure screen adjustment
2. Paper wall template included for easy hole marking
3. Swivel points enables quick, smooth screen positioning
4. Ideal for mounting across 16" stud walls

- Integrated cable management throughout the mount
- Suitable for both landscape and portrait mounting
- Tilt can also be fixed at selected angles of -2˚,0˚ & 15˚
- Slim-line design allows close-to-wall installation when folded flat
- Lateral adjustment of screen after mounting
- Safety screws to prevent unauthorised screen removal
- Cover plates included for an attractive finish
- Simple 'hook-on' installation with all mounting hardware included
- ***100% plastic free packaging***

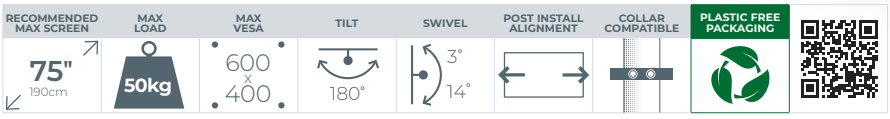

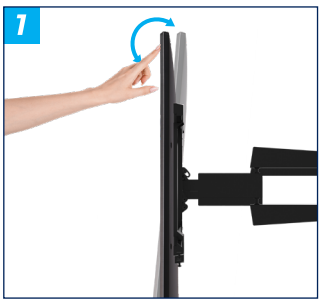

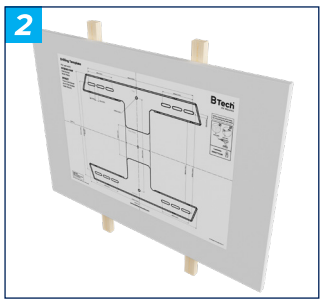

BT8227

glide • cantilever

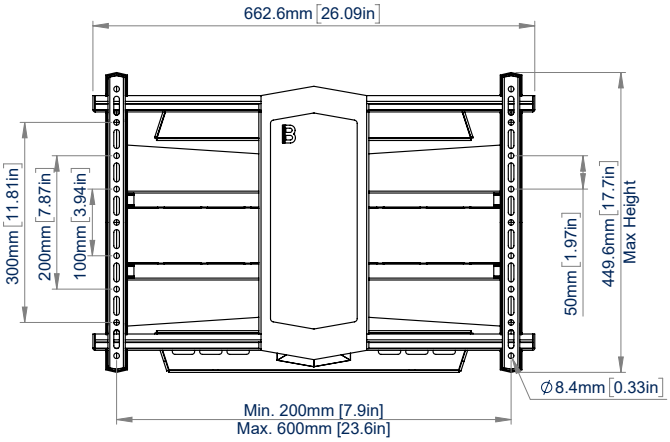

FRONT VIEW

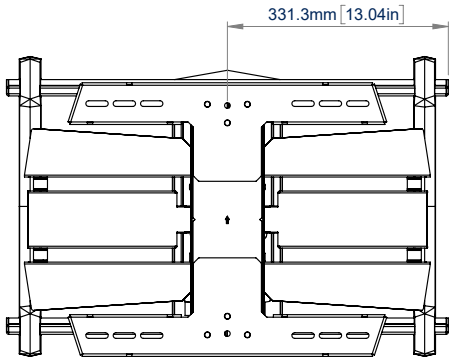

REAR VIEW

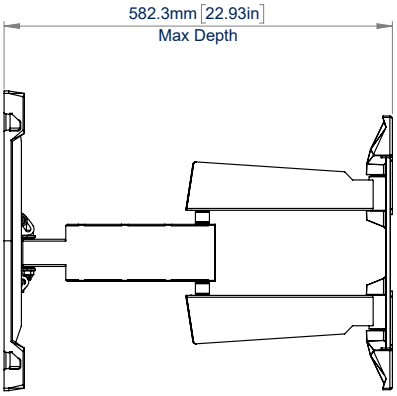

MAX EXTENSION
SIDE VIEW

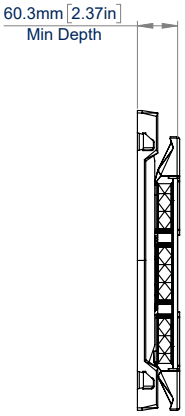

MIN EXTENSION
SIDE VIEW

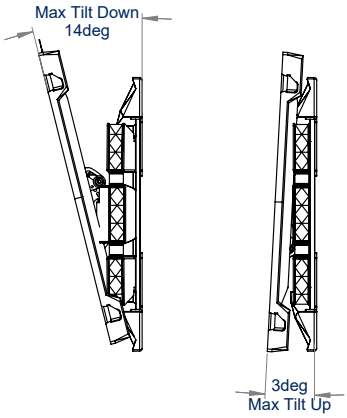

TILT ADJUSTMENT
SIDE VIEW

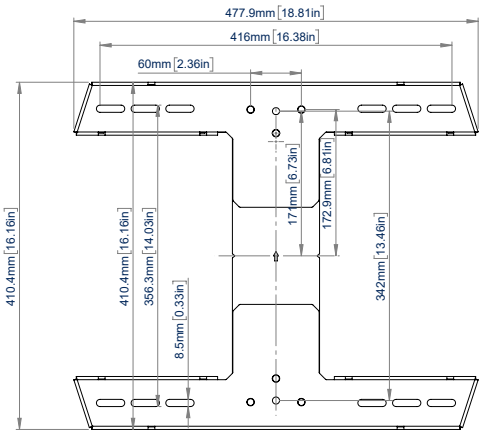

WALL PLATE

ORDERING INFORMATION

COLOUR	ORDER REF	EAN
Black	BT8227/B	5019318307072

RELATED PRODUCTS

PRODUCT CODE	NAME	DESCRIPTION
BT8229	Double Arm Wall Mount with Tilt & Swivel	Features easy tilt and swivel, ideal for screens up to 65"
BT8228	Heavy Duty Twin Cantiliver Wall Mount with Tilt & Swivel	Features easy tilt and swivel, ideal for screens up to 120"
BTV513	Double Arm Wall Mount	Features easy tilt and swivel, ideal for screens up to 55"
BTV914	Universal Soundbar Mount	Ideal for mounting a soundbar speaker to your screen

© 2025 B-Tech AV Mounts Corporation Ltd. All rights reserved.
The information in this specification sheet affects the current technical specifications at the time of print.
We reserve the right to change specifications without prior notice. The B-Tech name and the B-Tech logo are registered trademarks of B-Tech AV Mounts Corporation Ltd
All other brands and products are trademarks of their respective owners. All B-Tech images and symbols are exclusive property of B-Tech AV Mounts Corporation Ltd
B-Tech accepts no liability for loss or damages caused by improper installation or mounting on unsuitable structures. Any reproduction or retransmission or republication of any part of this
specification without prior written permission is strictly prohibited. Printed by B-Tech AV Mounts Corporation Ltd UK.

SS-V1-BT8227-011025