BT7841

SYSTEM 2™
2-PIECE ACCESSORY COLLAR
FOR Ø50MM POLES

The **BT7841** Ø50mm Accessory Collar is a fundamental component of the 'System 2' range, facilitating the attachment of various mounts and accessories to B-Tech poles. Its 2-piece split design ensures a swift and straightforward installation process, enabling the retrofitting of accessories onto existing installations without disassembly. The inclusion of plastic cover plates as standard provides a neat appearance for finished installations.

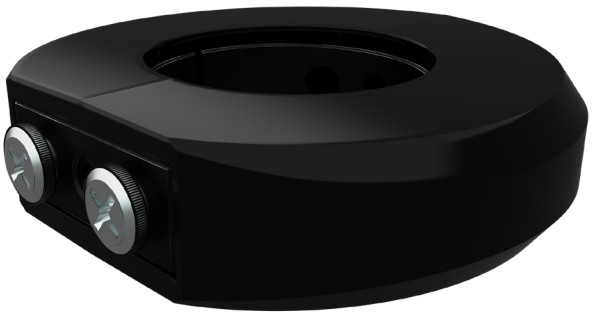

SPECIFICATIONS

Compatible Pole Diameter	**Ø50mm**
Collars supplied per pack	**1**
Colour	**Black** or **Chrome**

FEATURES

1. 2-piece split design for easy installation
2. Dual fixing points allow back-to-back installations onto a single collar
3. Supplied with cover plates for a smart finish
4. Available in black or chrome finish

- Enables a range of mounts and accessories to be fitted to Ø50mm poles
- The 2-piece clamping method prevents installations from marking poles

SYSTEM 2™

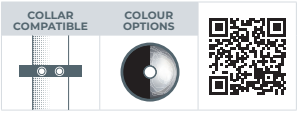

**Please note the covers cannot be used for back-to-back configurations*

BT7841

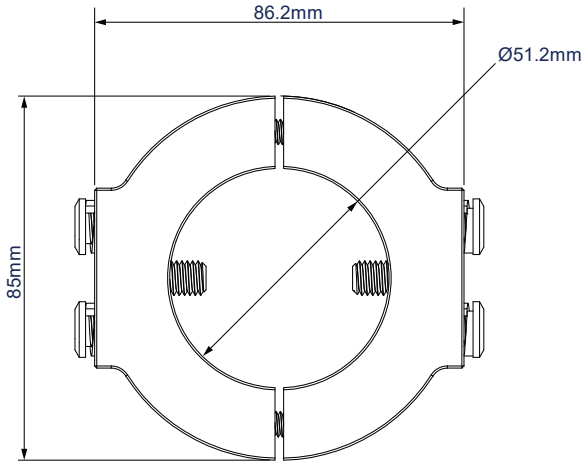

TOP VIEW

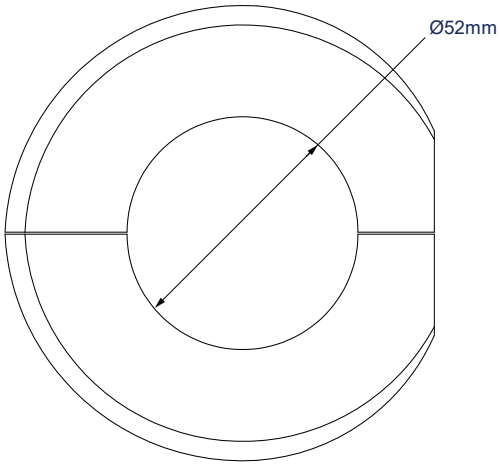

TOP VIEW
COVER

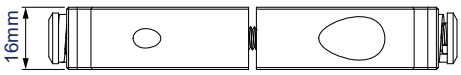

SIDE VIEW

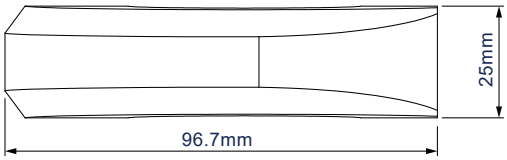

SIDE VIEW
COVER

ORDERING INFORMATION

COLOUR	ORDER REF	EAN
Black	BT7841/B	5019318079504
Chrome	BT7841/C	5019318079511

RELATED PRODUCTS

PRODUCT CODE	NAME	DESCRIPTION
BT7850	Ø50mm Poles	Available in a variety of lengths to create multiple pole-mounted solutions
BT8390-CFK	Collar Fixing Kit	Use with B-Tech accessory collars to attach a BT8390 mounting rail to a pole
BT8431	Flat Screen Wall Mount with Tilt	Designed for screens up to 55" & features our easy tilt mechanism
BT7051	Heavy Duty Accessory Collar	Heavy duty accessory collar to attach mounts and accessories to Ø50mm poles

© 2025 B-Tech AV Mounts Co. Ltd. All rights reserved.
The information in this specification sheet affects the current technical specifications at the time of print.
We reserve the right to change specifications without prior notice. The B-Tech name and the B-Tech logo are registered trademarks of B-Tech AV Mounts Co. Ltd.
All other brands and products are trademarks of their respective owners. All B-Tech images and symbols are exclusive property of B-Tech AV Mounts Co. Ltd.
B-Tech accepts no liability for loss or damage caused by improper installation or mounting on unsuitable structures. Any reproduction or retransmission or republication of any part of this
material without the express prior written permission is strictly prohibited. Printed by B-Tech AV Mounts Co. Ltd 2025.

SS-V1-BT7841-300925