BT7825

SYSTEM 2™

Truss Mount

For Use With BT7850 Poles

Installation Guide

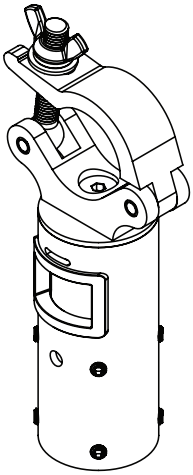

- Designed to fit B-Tech's Ø50mm (2") poles onto truss systems, scaffolding and other horizontal poles
- Max load (single screen installation): 70kg (154lbs)
- Max load (back-to-back installation): 140kg (308lbs)
- Truss compatibility: Ø42mm - Ø50mm (1.7" - 2")

Max Load Back-To-Back	Max Load Single Screen
140kg [308lbs]	70kg [154lbs]

Contents

	Pg
Installation Safety Notes	2
Parts List	4
Installation Instructions	5
Typical Installation	7
Product Dimensions	7
B-Tech Contact Details	8

BT7825

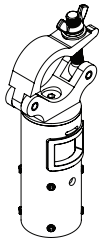

Installation Safety Instructions

Caution: This mount is intended for use only with the maximum weights indicated. Use with equipment heavier than the maximum indicated may result in instability causing possible injury.

Do not attempt to install this product until all instructions and warnings have been read and properly understood. *Please keep these instructions for future reference.*
Please check carefully to make sure there are no missing or defective parts - defective parts must never be used. B-Tech AV Mounts, its distributors and dealers are not liable or responsible for damage or injury caused by improper installation, improper use or failure to observe these safety instructions. In such cases, all guarantees will expire.

General

B-Tech AV Mounts recommends that a professional AV installer or other suitably qualified person install this product. Great care must always be taken during installation as most AV equipment is of a fragile nature, possibly heavy and easily damaged if dropped. If you do not fully understand the instructions or are not sure how to install this product safely, then please consult a professional for advice and/or to install this product for you. Failure to mount this product correctly may cause serious injury or death both during installation and at any time thereafter. Do not mount any AV equipment that exceeds the specific weight limit of the product you are installing. This weight limit will be clearly stated on each product and its packaging and will vary from product to product.

Product location

Please pay careful attention to where this product is located. Check load capacity of the structure prior to installation as some surfaces are not suitable for installation. Designed for indoor use, this mount is suitable for public or home installation. If located in a public or frequently populated area ensure that the product is out of the immediate reach of people. If any AV equipment is to be suspended over the likely path or location of people then great care should be taken to secure all parts of the installation from falling. When drilling holes it is essential to avoid contact with electrical cables and water or gas pipes contained within. Use of a good quality live wire detector and hidden object locator is therefore recommended. Only drill into structures when you are sure it is safe to do so.

Fixing hardware

It is highly recommended that all fixing screws be used where supplied and that the purpose of all other fixing hardware is fully understood. In some cases more AV equipment fixing hardware will be supplied to accommodate different models of equipment and set up configurations. The installer must be satisfied that any supplied fixing hardware is suitable for each specific installation. The fixing kit supplied with the product may not be suitable for all walls. If any fixing screws or included hardware are deemed not sufficient for a safe installation then please consult a professional or your local hardware store.

Hazard limitation

When routing cables take advantage of any built in cable management features that the product might provide and ensure that all cables are tidy and secure. Check to see that any moving aspect of the product can do so unhindered by any cabling. Some products have moving parts and the potential to cause injury through the crushing or trapping of fingers or other body parts. Particular attention to the nature of moving parts is required especially when assembling installing and adjusting during set up. Immediately after installation double-check that the work done is safe and secure. Double-check all necessary fixings are present and are of ample tightness. It is recommended that periodic inspections of the product and its fixing points are made as frequently as possible (no more than 6 months apart) to ensure that safety is maintained. If in doubt consult a professional AV installer or other suitably qualified person.

CN B-Tech AV Mounts 建议本产品由专业AV安装人员或其他合格人员安装。 B-Tech AV Mounts 及它的代理商、经销商不对由于不恰当的安装而造成的损失或伤害负责。 本产品必须安装在合适的架构上，并仅用于不超过所标示的最大承重。

CS Společnost B-Tech AV Mounts doporučuje provést instalaci tohoto produktu instalátora AV či jinak způsobilé osoby. Společnost B-Tech AV Mounts, její distributoři a prodejci nenesou prostřednictvím odborného odpov ědnost za škody nebo zranění zp ůsobená nevhodnou instalací. Tento výrobek je nutno umístit do vhodné konstrukce a používat jen po uvedenou maximální výšku.

DE B-Tech AV Mounts empfiehlt, dass dieses Produkt durch einen qualifizierten AV-Techniker oder eine andere Person mit geeigneter Qualifikation installiert wird. B-Tech AV Mounts, ihre Distributoren und Händler können nicht für durch fehlerhafte Montage verursachte Beschädigung oder Verletzung haftbar bzw. verantwortlich gemacht werden. Dieses Produkt muss auf einem geeigneten Untergrund montiert werden und darf nur bis zum angegebenen Höchstgewicht verwendet werden.

EN B-Tech AV Mounts recommends that this product be installed by a qualified AV technician or other suitably qualified person. B-Tech AV Mounts, its distributors and dealers are not liable or responsible for damage or injury caused by improper installation, improper use or failure to observe these safety instructions. In such cases, all guarantees will expire. This product must be mounted on a suitable surface and may only be used up to the specified maximum weight.

ES B-Tech AV Mounts recomienda que un instalador de audio y video profesional u otra persona debidamente cualificada instalen este producto. B-Tech AV Mounts, sus distribuidores y concesionarios no se hacen cargo ni se responsabilizan de ningún daño o lesión provocados por una instalación inapropiada. Este producto se debe montar en una estructura adecuada y se debe utilizar soportando solamente hasta el peso máximo indicado.

FR B-Tech AV Mounts recommande de confier l'installation de ce produit à un installateur AV professionnel ou à une autrepersonne dûment qualifiée. B-Tech AV Mounts, ses distributeurs et ses revendeurs ne sauraient être tenus responsables de tout dégât ou de toute blessure résultant d'une installation incorrecte. Ce produit doit être monté sur un support approprié et utilisé dans la limite du poids maximum indiqué.

IT B-Tech AV Mounts consiglia di affidare l'installazione di questo prodotto a un installatore specializzato o ad altra personaadeguatamente qualificata. B-Tech AV Mounts, i suoi distributori e rivenditori non accettano alcuna responsabilità nei riguardi di eventuali danni o infortuni causati da un'errata installazione. Questo prodotto deve essere fissato a una struttura idonea e utilizzato unicamente sino al peso massimo indicato.

JP B-Tech AV Mounts はAV設置の専門家または適合した知識を備えた人が製品を設置することを推奨します。 B-Tech AV Mountsと販売店、取引先はこうした安全指針に従わない場合に随伴される製品の損傷や傷害に対する責任を負いません。 場合によって製品が設置されるに適していないところもあるので設置位置に特別な注意を傾けてください。この製品の位置に注意を傾けて設置に適していない壁がいるかを確認してください。 指定した重さ制限を超過するAV装備を装着しないでください。

KR B-Tech AV Mounts 는 AV 설치 전문가 또는 적합한 지식을 갖춘 사람이 제품을 설치하도록 권장합니다. B-Tech AV Mounts 와 판매점, 거래처는 이러한 안전 지침을 따르지 않을 경우에 수반될 제품의 손상이나 상해에 대한 책임을 지지 않습니다. 경우에 따라 제품이 설치되기에 적합하지 않은 곳들도 있으므로 설치 위치에 특별한 주의를 기울여 주시기 바랍니다. 제품의 설치 위치에 주의를 기울여 확인하십시오. 지정된 무게 제한을 초과하는 AV 장비를 장착하지 마십시오.

NL B-Tech AV Mounts adviseert om dit product te laten installeren door een professionele AV-installateur of andere hiervoor gekwalificeerde persoon. B-Tech AV Mounts , haar distributeurs en dealers zijn niet aansprakelijk of verantwoordelijk voor schade of letsel die is veroorzaakt door onoordeelkundige installatie. Dit product moet worden gemonteerd aan een geschikte constructie, waarbij het aangegeven maximum gewicht niet mag worden overschreden.

PL Firma B-Tech AV Mounts zaleca, aby ten produkt był instalowany przez profesjonalnych instalatorów AV lub inny odpowiednio przeszkolony personel. Firma B-Tech AV Mounts, jej dystrybutorzy i dealerzy nie ponoszą odpowiedzialności za uszkodzenia lub obrażenia ciała powstałe w wyniku nieprawidowej instalacji. Niniejszy produkt musi być amontowany na odpowiedniej powierzchni, a podczas użytkowania nie wolno przekraczać podanego maksymalnego obciążenia.

PT A B-Tech AV Mounts recomenda que a instalação deste produto seja efectuada por um instalador de AV instalador de AV profissional ou outra pessoa devidamente habilitada. A B-Tech AV Mounts e os seus distribuidores e concessionários não são responsáveis por danos ou lesões causados por uma instalação incorrecta. Este produto tem de ser montado numa estrutura adequada e utilizado somente até ao peso máximo indicado.

RU Компания B-Tech AV Mounts рекомендует, чтобы установка данного изделия производилась инженером по установке аудтио-видеотехники или другим специалистом с соответствующей квалификацией. Компания B-Tech AV Mounts ее дистрибьюторы и дилеры не несут ответственности за повреждения или травмы, полученные в результате неправильной установки.

توصي بي- تك للتجارة الدولية المحدودة بأن شخص محترف فى تركيب ال AV او شخص مؤهل تأهيلا مناسبا لتركيب هذا المنتج. بي- تك للتجارة الدولية، موزعيها والتجار ليست عرضة أو مسؤولة عن الأضرار أو الإصابات الناجمة عن تركيب غير سليم، والاستخدام غير السليم أو عدم مراعاة هذه التعليمات للسلامة. يجب أن يتم تركيب هذا المنتج في بنية مناسبة ويجب استخدامة فقط لدعم الحد الأقصى للوزن المشار إليه.

BT7825 **Parts List**

Please keep this for future reference

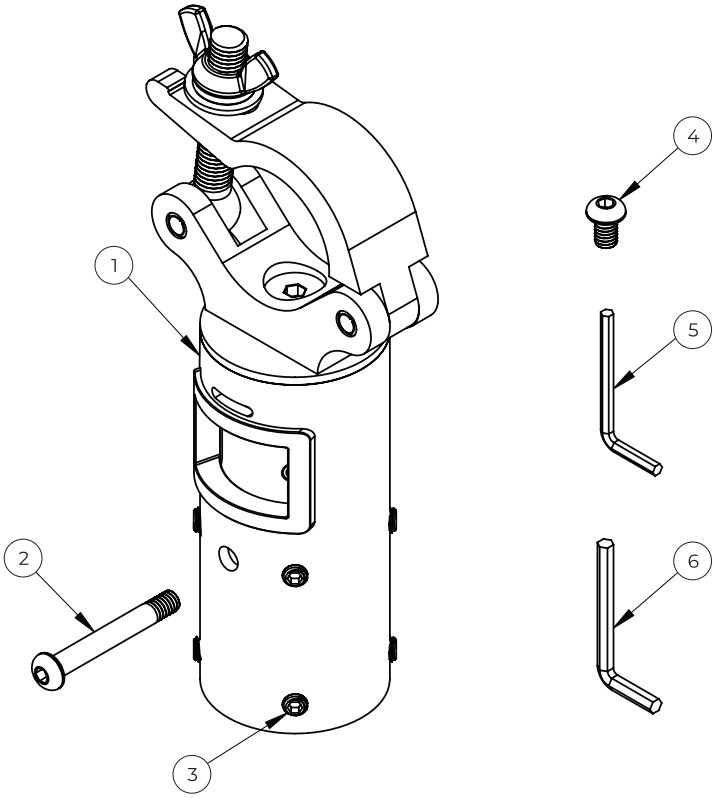

Item	Description	Qty
1	Truss Clamp	1
2	M8 x 60mm Safety Bolt	1
3	M8 x 6mm Grub Screw	8
4	M8 x 12mm Screw	1
5	4AF Hex Key	1
6	5AF Hex Key	1

Suitable for loads up to 140kg (308lbs) for back-to-back installations
or 70kg (154lbs) for single screen installations

Installation Instructions

1. Connect Ø50mm Pole To Truss Mount

i. Insert a BT7850 Ø50mm (2") pole *(sold separately)* into *item 1*. Lining up the safety screw hole with the hole on the BT7850 pole.

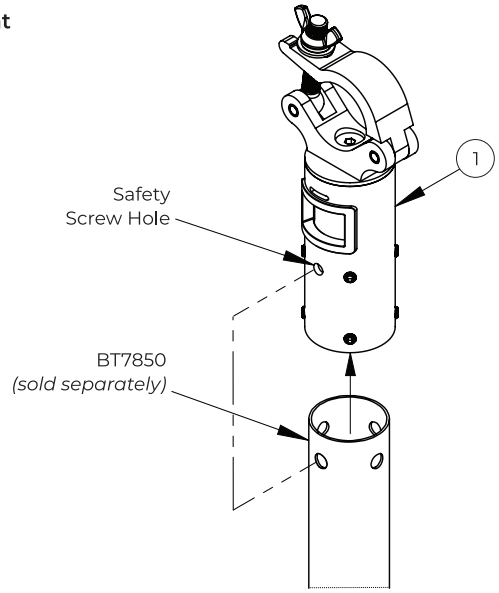

ii. Insert *item 2* and tighten using *item 6*.

Optional:
Item 2 can be replaced with *item 4* to prevent cables from being obstructed.

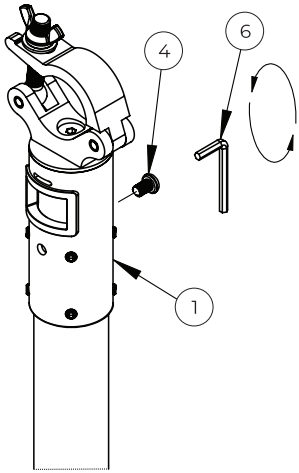

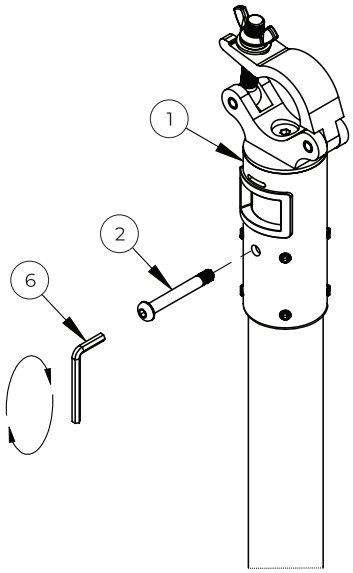

Warning!
Ensure *item 2* or *item 4* is in place before any AV equipment is fitted.

BTech AV Mounts

2. Connect Clamp To Truss

i. Open Truss Mount Clamp

Unscrew the wing nut on *item 1* until the clamp can be opened

Note: The wing nut does not need to be fully removed.

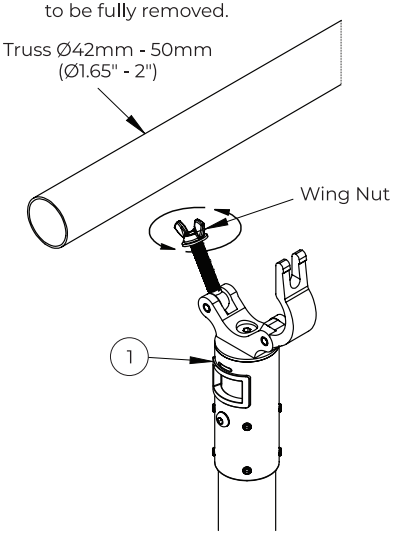

ii. Secure Truss Mount to Truss

Close the clamp around the Truss. Tighten the wing nut, ensuring the wing nut and washer are flat on the moveable part of the clamp.

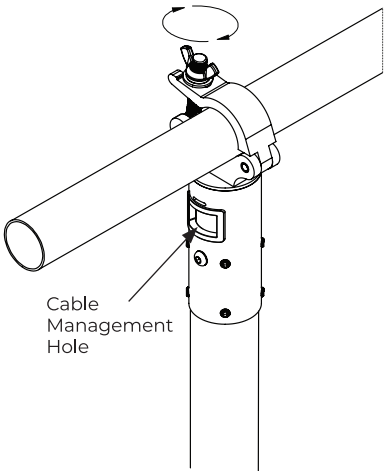

3. Fix Pole In Place

Tighten *item 3* using *item 5*.

Note: If necessary the angle of the pole can be adjusted by using *item 3* and *item 5*.

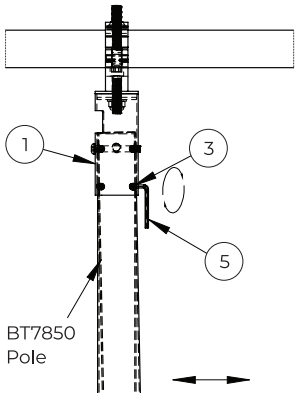

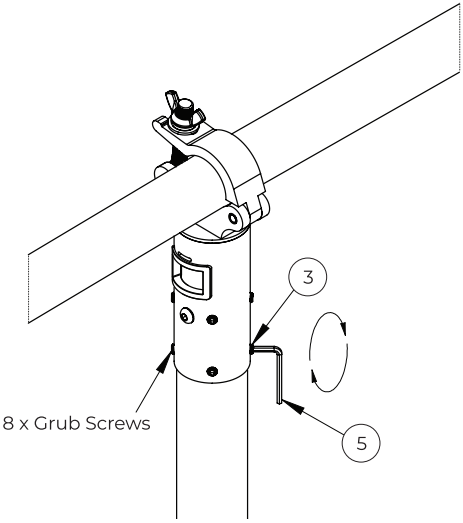

Typical Installations

Screen Mount

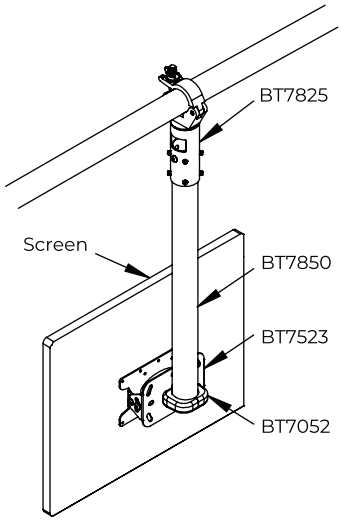

Projector Mount

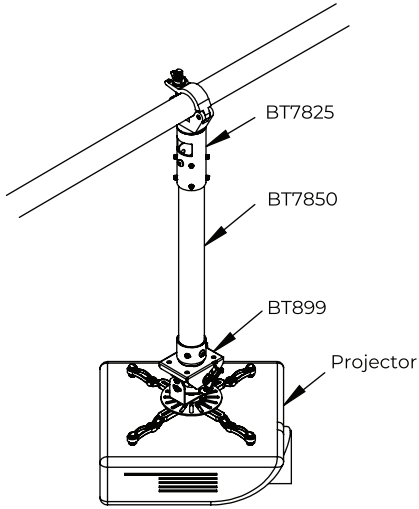

BT7825 **Dimensions**

Please keep this for future reference

Front View

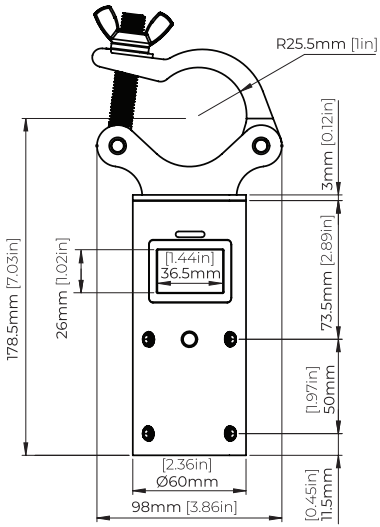

Side View

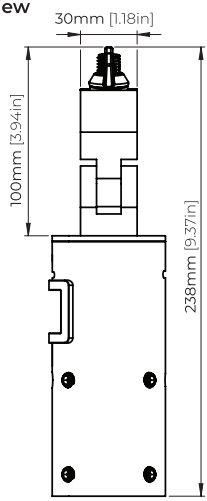

Bottom View

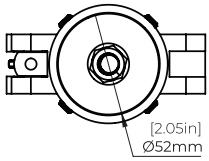

These instructions are intended as a guide only and B-Tech accepts no liability for the accuracy of the information contained in this document.

Contact: info@btechavmounts.com

©2024 B-Tech AV Mounts Corporation Ltd. All rights reserved.

B-Tech AV Mounts is a division of B-Tech AV Mounts Corporation Ltd.
B-Tech AV Mounts and the B-Tech logo are registered trademarks.
All B-Tech images and symbols are exclusive property of B-Tech AV Mounts Corporation Ltd.
All other brands and product names are trademarks of their respective owners.
Any reproduction, retransmission or republication of any part of this manual is strictly prohibited, unless prior written permission has been granted by B-Tech AV Mounts Corporation Ltd.
Photographs are for illustrative purposes only. E&OE

AMA-BT7825-V2-0624-03 Made in the P.R.C.